Ralli Wolf

100 MM LIGHT WEIGHT HEAVY DUTY STRAIGHT GRINDER
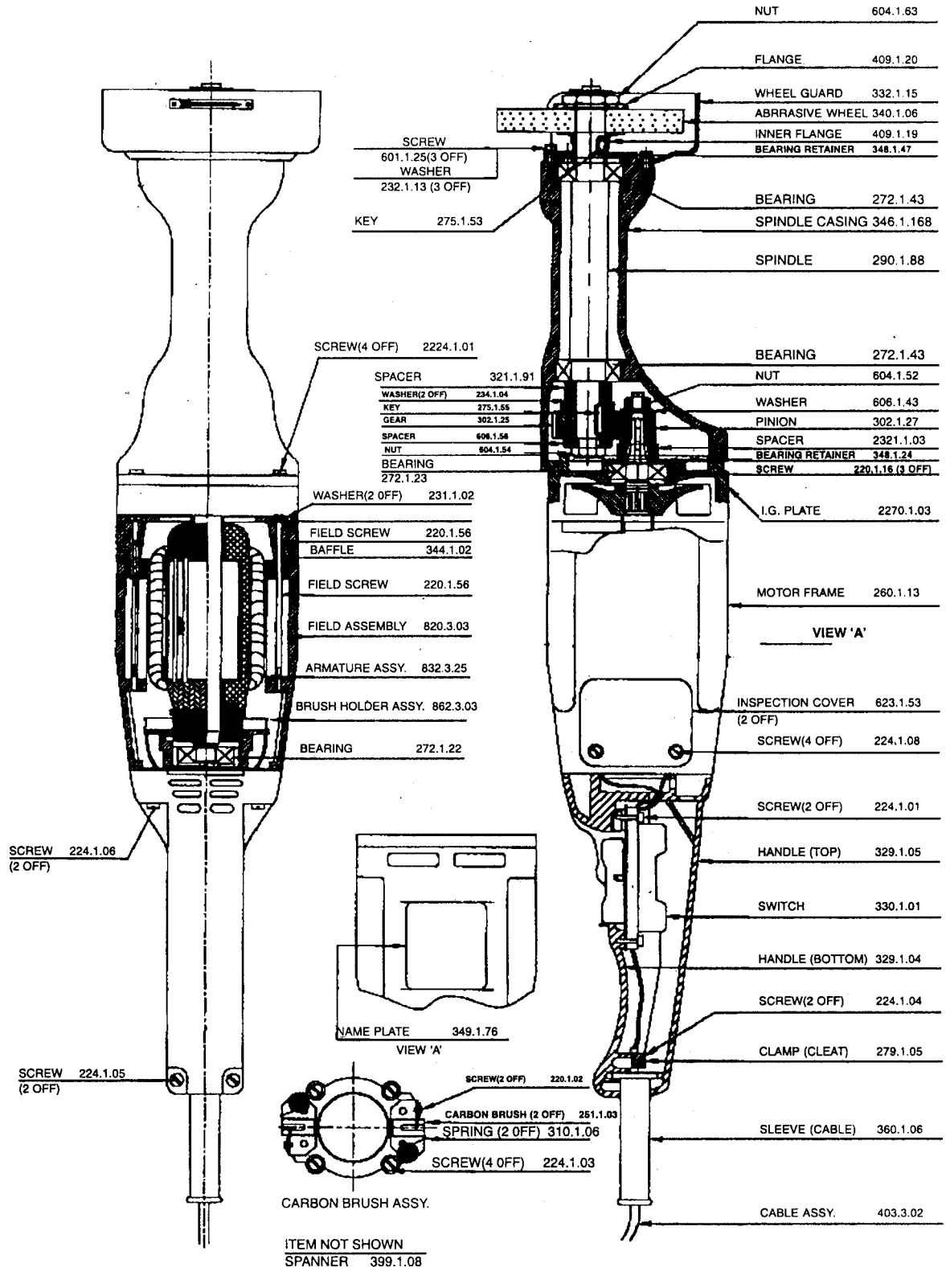
TYPE : 36100